NMISA

20 April 2021

C.S. Veldman

Technical protocol of the Bi-Lateral Comparison AFRIMETS.AUV.V-K5

Task and Purpose of the Comparison

Through the CIPM, NMIs participate in key comparisons (KC) to evaluate and proof calibration system performance at the highest accuracy level (smallest uncertainty of measurement). However, in certain instances, participation in a CIPM might be impractical. For CSIR-NPL, India, NIMT, Thailand and INTI, Argentina to proof their capabilities, linked to the CIPM comparison, CCAUV.V-K5, this AFRIMETS key comparison, AFRIMETS.AUV.V-K5, is proposed.

The task of this bi-lateral comparison is to measure the complex charge sensitivity (pC/(m/s^2)) [1, 2] of two accelerometer(s) of different types, at specified frequencies by primary means in accordance with ISO 16063-11 “Methods for the calibration of vibration and shock transducers -- Part 11: Primary vibration calibration by laser interferometry” [3]. For the participating laboratories, the charge sensitivity reported will exclude effects from the applicable conditioning amplifier used. The participating laboratory shall provide the amplifier to be used and determine and correct for the effect (gain) of the amplifier on the calibration result. **No conditioning amplifier will accompany the circulation of the transfer standards.**

The comparison reference values (CRVs) will be obtained from the NMISA primary vibration calibration system and the degrees of equivalence between the values of the participating laboratory and the CRVs determined. The reported sensitivities and associated uncertainties are then supposed to be used for the calculation of the DoE between the participating NMI and the CCAUV.V-K5 key comparison reference values (KCRVs).

The reported values (participating laboratory capability dependent), magnitude and phase, will be linked to the KCRV over the frequency range 10 Hz to 20 kHz as reported during CCAUV.V-K5. The values obtained from the NMISA primary vibration calibration system will serve as the link between the KCRV and the values reported by the participating laboratory.

Pilot Laboratory

Pilot laboratory for this comparison is:

National Metrology Laboratory of South Africa (NMISA)
Acoustics, Ultrasound and Vibration Section
CSIR Campus, Building 7
Meiring Naude Road
Brummeria
0184
South Africa

Contact Person:
C.S. Veldman
Phone: +27 12 841 4008
E-mail: CSVeldman@NMISA.org

***The address above is the delivery address for the set of artefacts*.**

The delivery address for reports is:

C.S. Veldman
NMISA, AUV
Private Bag X34
Lynnwood Ridge
0040
South Africa

Participants

The following laboratories have been registered as participants in the agreed comparison:

Contact details of participating laboratory representative(s):

1) NMISA / South Africa (Pilot & Reference Laboratory)
National Metrology Institute of South Africa
Acoustics, Ultrasound and Vibration Laboratory
C.S. Veldman
Private Bag X34
Lynnwood Ridge
0040
South Africa
Phone: +27 12 841 4008
E-mail: CSVeldman@NMISA.org

2) CSIR India (NPLI)
CSIR-National Physical Laboratory
Acoustics and Vibration Standards
Dr. Naveen Garg
New Delhi
110 012
India

Phone: + 91 986 837 7370
E-mail: ngarg@nplindia.org

3) NIMT
Mr. Pairoj Rattanangkul
National Institute of Metrology (Thailand)
75/7 Rama VI Rd.
Thungphayathai
Rajthevi
Bangkok
10400
Thailand

Phone: +66 85 901 1001
E-mail: pairoj@nimt.or.th

4) INTI Instituto Nacional de Tecnología Industrial
Lic. Federico A. Serrano
Laboratorio de Acústica y Vibraciones
Departamento de Mecánica y Acústica - Metrología Física
Subgerencia Operativa Metrología Científica e Industrial

Phone (+54 11) 4724 6200/300/400
E-mail: fserrano@inti.gob.ar

Terms of Participation

Following recommendations from the published document, “Recommendations from the Working Group on the Implementation and Operation of the CIPM MRA” [4], NMISA, as member of AFRIMETS, is piloting this key comparison as the linking laboratory between NPLI, NIMT, INTI (participating NMIs) and CCAUV.V-K5. Following this recommendation, this

technical protocol is distributed to the chairman of the CCAUV Key Comparison Working Group (CCAUV KCWG) for review and approval on behalf of the CCAUV.

The participating NMIs wishes to demonstrate the degree of equivalence of their primary vibration calibration capability internationally. For this, these participating NMIs indicated their willingness to participate in this key comparison to support future CMC submissions.

The intent is to cover the scope of CCAUV.V-K5, within the current capability of the participating NMI, with a sufficiently low measurement uncertainty by the participants.

The participating NMIs agree to participate in this key comparison voluntarily and to abide by the stipulations laid out in this protocol.

The participating NMI will carry all related cost for its leg of the comparison (courier- and customs fees, export from South Africa and re-import to South Africa). The artifacts will be circulated as follows:

Leg 1: From South Africa to India, back to South Africa from India.

Import/export: Temporary export.

NPLI is responsible for all courier arrangements and costs. This includes collection from NMISA, South Africa and delivery to NMISA, South Africa.

Leg 2: From South Africa to Thailand, back to South Africa from Thailand.

Import/export: Temporary export.

NIMT is responsible for all courier arrangements and costs. This includes collection from NMISA, South Africa and delivery to NMISA, South Africa.

Leg 3: From South Africa to Argentina, back to South Africa from Argentina.

Import/export: Temporary export.

INTI is responsible for all courier arrangements and costs. This includes collection from NMISA, South Africa and delivery to NMISA, South Africa.

The Pilot Laboratory, NMISA, will make the artefacts available for the duration of the comparison. NMISA will arrange the ATA Carnet and carry the cost for the carnet. NMISA will compile all documentation required for the temporarily export.

NMISA will submit its official comparison results to the CCAUV Secretariat at a date not later than the date on which the artefacts are shipped to the first participant, NPLI. These calibration results will be used to link the results of the participating NMIs to the KCRV for the frequency interval 10 Hz to 20 kHz and to calculate a CRV from 5 Hz to < 10 Hz.

Devices Under Test and Measurement Conditions

For the calibration task of this Comparison, a set of two piezoelectric accelerometers will be circulated among the participating laboratories.

The individual transducers being:

- a Brüel & Kjær 8305-001 (SN: 2…147) “single ended” (SE) type,
    - the SE accelerometer/adaptor combination is referred to hereafter as the “SE Device”
- an ENDEVCO 2270 (SN: 1...317) “back to back” (BB) type.

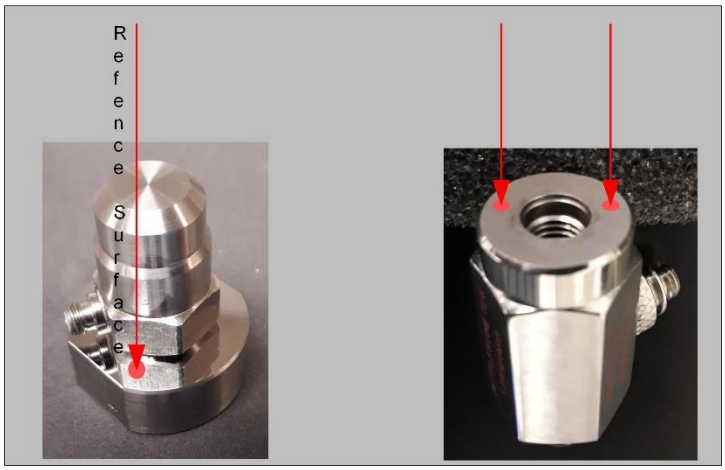

Figure 1: Reference surfaces indicated for the Brüel & Kjær 8305-001 accelerometer complete with adaptor and the ENDEVCO 2270

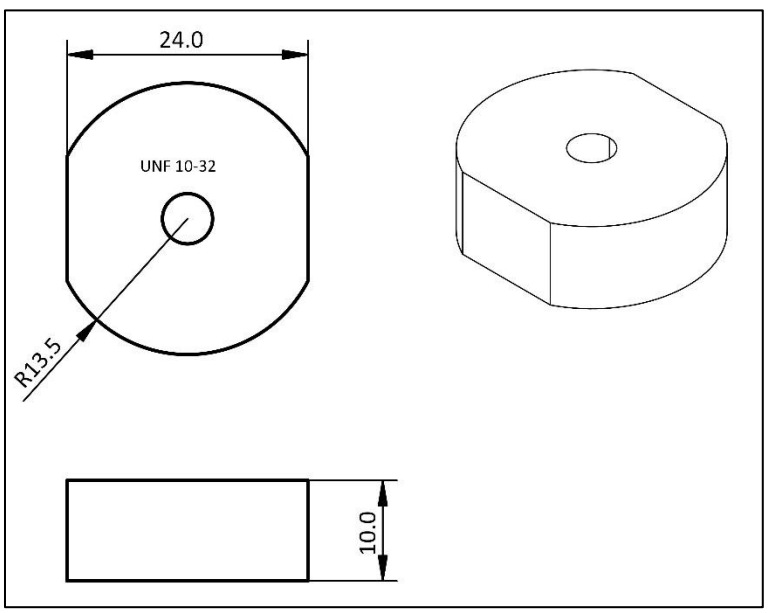

Figure 2: Drawing showing stainless steel adaptor dimensions. Drawing is not to scale.

The accelerometers are to be calibrated for magnitude (S_{qa}) and phase (θ_{qa}) of their complex charge sensitivity according to those procedures and conditions implemented by the NMI in conformance with ISO 16063-11 [3] which provide magnitude and phase information of the

artefact. The sensitivities reported shall be for the accelerometer's alone, excluding any effects from the charge amplifier.

The frequency range of the measurements was agreed to be from 5 Hz to 20 kHz. **Laboratories whose current capability does not cover the complete frequency range of 5 Hz to 20 kHz, will submit calibration results over its capability current frequency range.**

Only the frequency subset of 10 Hz to 20 kHz will be linked to CCAUV.V-K5. The laboratories are supposed to measure at the following frequencies (all values are in Hz).

5, 6.3, 8, 10, 12.5, 16, 20, 25, 31.5, 40, 50, 63, 80, 100, 125, 160, 200, 250, 315, 400, 500, 630, 800, 1 000, 1 250, 1 500, 1 600, 2 000, 2 500, 3 000, 3 150, 3 500, 4 000, 4 500, 5 000, 5 500, 6 000, 6 300, 6 500, 7 000, 7 500, 8 000, 8 500, 9 000, 9 500, 10 000, 10 500, 11 000, 11 500, 12 000, 12 500, 13 000, 13 500, 14 000, 14 500, 15 000, 15 500, 16 000, 16 500, 17 000, 17 500, 18 000, 18 500, 19 000, 19 500, 20 000.

Note: this set does deviate from the standard frequencies of ISO 266 [5].

Participating laboratories will provide magnitude and phase results**,** over the specified frequency range. Laboratories are required to provide calibration results that fall within its system's calibration capabilities at the time of this comparison only.

The charge amplifier used for the calibration is not provided within the set of the artefacts, it must therefore be provided by the individual participants. **By this measure, the capability of the participating laboratory to calibrate charge amplifiers can be implicitly verified**.

The measurement condition should be kept according to the laboratory's standard conditions for calibration of customer accelerometers for claiming their best Calibration and Measurement Capability (CMC) where applicable. This presumes that these conditions comply with those defined by the applicable ISO documentary standards [2, 3, 6], simultaneously.

Specific conditions for the measurements of this key comparison are:

- acceleration amplitudes: preferably 10 m/s² to 100 m/s², frequency dependent. A range of 2 m/s² to 800 m/s² is admissible.
- ambient temperature during the calibration:
    - (23 ± 2) ºC (actual values to be stated within tolerances of ± 0,3 ºC).
    - relative humidity: max. 75 %RH
- mounting torque of the accelerometer: (2,0 ± 0,1) N·m

Circulation Type, Schedule, and Transportation

The transducers will be circulated in a circular and star like fashion with a measurement period of three weeks provided for each participant. The transducers are measured at the pilot laboratory before they are transported to participants, and after it is received back from participants to monitor the stability and identify any drift during the circulation period.

A total period of five weeks is allocated for each laboratory, covering both calibration and transportation. Three weeks for measurements and two weeks for transportation.

The pilot laboratory are sensitive to the possibility of delays in transport, customs clearing and quarantine requirements imposed to comply with Covid 19 protocols.

***Planned circulation period*:** Six months

Preparatory stage:

Basic investigation, e.g. test of linearity and previous long-term stability analysis of transfer standards: April 2021 to August 2021. Envisaged circulation stability check on completion of device circulation: January 2022.

Comparison Reference Values: August 2021

Start of first circulation period: Sept 2021

End of first the circulation period: November 2021

Stability Check 1: December 2021

Start of the second circulation period: January 2022

End of the second circulation period: February 2022

Stability Check 2: February 2022

Completion of the circulation period: April 2022

Draft report: June 2022

***Final report*:** September 2022

The schedule is planned as follows:

Participant	**Country Code**	**Measurement**		**Transport of Artifacts**		**Monitoring**	
		From	**To**	**From**	**To**	**From**	**To**
NMISA	ZA	Stability measurements				Apr 2021	Aug 2021
NMISA Reference Values	ZA	16 Aug 2021	3 Sept 2021	8 Sep 2021 SA to India	15 Sep 2021	-	-
NPLI	IN	20 Sep 2021	8 Oct 2021	13 Oct 2021 India to SA	20 Oct 2021	-	-
NMISA Monitoring	ZA			3 Nov 2021 SA to Thailand	10 Nov 2021	25 Oct 2021	29 Oct 2021

Participant	Country Code	Measurement		Transport of Artifacts		Monitoring	
		From	To	From	To	From	To
NIMT	TH	15 Nov 2021	3 Dec 2021	8 Dec 2021 Thailand to SA	15 Dec 2021		
NMISA Monitoring	ZA			12 Jan 2022 SA to Argentina	19 Jan 2022	3 Jan 2022	7 Jan 2022
INTI	AR	24 Jan 2022	11 Feb 2022	16 Feb 2022 Argentina to SA	23 Feb 2022		
NMISA Monitoring	ZA	-	-	-	-	28 Feb 2022	4 Apr 2022

Transportation and Financial Aspects

For transportation, the artefacts are packed in a protective aluminum box, which in turn is put into a card-board container.

The dimensions are: 39 cm x 27 cm x 19 cm

The approximated weight is: 2 kg.

The accelerometers must be sent by an international logistic service providing a tracking system. The transportation must include an insurance covering a total value of R 150 000 in case the set of accelerometers gets damaged or lost during transportation.

As an alternative the artefact may be hand carried by a member of the participating laboratory to the following laboratory, at the cost of the sending, not receiving, laboratory.

Each participating laboratory is responsible for its own costs for the measurements, transportation to following participant, and any customs charges as well as any damage that may occur within its country. The cost of transportation to the following (receiving) laboratory shall be covered by the participating (sending) laboratory.

Handling, Measurement and Analysis Instructions

All participating laboratories must observe the following instructions:

- The charge amplifier used for the measurement of the accelerometer's response must be calibrated with equipment traceable to national measurement standards.
- *The SE accelerometers shall be mounted together with the mounting adapter, that comes attached to it. The combined SE accelerometer with adapter (SE Device) should be handled as a single mechanical unit for mounting.*
    - *The mounting adapter must not be adjusted, loosened, or removed.*

    - *The mounting and dismounting torque between the adapter and the vibration exciter shall be applied via the mounting adapter.*
    - Do not apply mechanical force to the accelerometer itself when fastening or unfastening the SE device.
- The motion of the SE accelerometers shall be measured on the polished top surface of the mounting adapter that comes attached, close to the accelerometer's housing as indicated in Figure 1 on page 4.
- The motion of the BB accelerometer should be measured with the laser directly on the (polished) reference surface of the transducer **without any additional reflector, mirror, or dummy mass** (c.f. Figure 1 on page 4).
- The sensitivity at the reference surface of accelerometer shall be reported.
- The mounting surface of the accelerometers and the moving part of the vibration exciter must be slightly lubricated before mounting.
- To reduce the influence of non-rectilinear motion, the measurements should ideally be performed for at least three different laser positions which are symmetrically distributed over the respective measurement surfaces. *The number of positions will be calibration system dependent.*
- For each accelerometer, the calibrations are to be carried out in accordance with the usual procedure of the participating laboratory.
- It is advised that the measurement results should be compiled from complete measurement series carried out at different days under nominally the same conditions, except that the accelerometer is remounted, and the cable re-attached.
    - **The standard deviation of the subsequent measurements should be included in the report**.
- The contribution of the conditioning amplifier shall be included in the Uncertainty of Measurement (UoM).

Communication of the Results to the Pilot Laboratory

Each participating laboratory will submit one printed and one signed calibration report for each accelerometer configuration to the pilot laboratory including the following:

- A description of the calibration systems used for the comparison, including the mounting techniques for the accelerometer.
- A description of the calibration methods used.
- The calibration results, including the relative expanded uncertainty of measurement, and the applied coverage factor for each value.
- A detailed uncertainty budget for the system covering all components of measurement uncertainty (calculated according to GUM, [6, 7, 8]). Including among others information on the type of uncertainty (A or B), assumed distribution function and repeatability component.

In addition, each participating laboratory will receive an electronic Excel spreadsheet prepared by the pilot laboratory, where the calibration results must be filled in following the structure given in the Excel file. The use of the electronic spreadsheet for reporting is **mandatory.** The consistency between the results in electronic form and the printed and signed calibration

report is the responsibility of the participating laboratory. The data submitted in the electronic spreadsheet shall be deemed the official results submitted for the comparison.

The results must be submitted to the pilot laboratory within four weeks after the measurements were completed by the participating laboratory.

The pilot laboratory will submit its set of results to the executive secretary of CCAUV in advance to the first measurement of the first participating laboratory.

Remarks on the Post Processing

Presuming consistency of the results as evaluated in [9], the CRVs and the degrees of equivalence (DoE) will be determined by comparing the laboratory observed values with the reference values obtained from primary calibration as stated in clause **Devices Under Test and Measurement Conditions.**

Degrees of equivalence with respect to the Comparison Reference Values

The unilateral DoE is to be calculated for the participants will be referred to the CIPM KCRV (CCAUV.V-K5) after linking provided by NMISA. The equations shall include the uncertainty added by the linking process.

The unilateral degrees of equivalence with respect to the CRVs will be calculated according to:

$$d_{i,CRV}(a) = x_i(a) - x_{CRV}(a) \tag{1}$$

$$u^2 = \begin{Bmatrix} u_i^2(a) - u_{CRV}^2(a) \text{for results within the LCS} \\ u_i^2(a) + u_{CRV}^2(a) \text{ for results not within the LCS} \end{Bmatrix} \tag{2}$$

$$u_{i,KCRV}^2(a) = \begin{Bmatrix} u_i^2(a) - u_{KCRV}^2(a) \text{for results within the LCS} \\ u_i^2(a) + u_{KCRV}^2(a) \text{ for results not within the LCS} \end{Bmatrix} \tag{3}$$

References

[1] ISO 2041 “Mechanical vibration, shock and condition monitoring – Vocabulary.”

[2] ISO 16063-1 “Methods for the calibration of vibration and shock transducers -- Part 1: Basic concepts.”

[3] ISO 16063-11 “Methods for the calibration of vibration and shock transducers -- Part 11: Primary vibration calibration by laser interferometry.”

[4] BIPM, “Recommendations from the Working Group on the Implementation and Operation of the CIPM MRA”, 23rd August 2016 http://www.bipm.org/utils/common/documents/CIPM-MRA-review/Recommendations-from-the-WG.pdf.

[5] ISO 266 “Acoustics — Preferred frequencies.”

[6] ISO/IEC 17025 “General requirements for the competence of testing and calibration laboratories.”

[7] ISO/IEC Guide 98-3 “Uncertainty of measurement -- Part 3: Guide to the expression of uncertainty in measurement (GUM:1995).

[8] ISO/IEC Guide 98-3/Suppl 1 “Propagation of distributions using a Monte Carlo method.”

[9] ISO 13528 “Statistical methods for use in proficiency testing by interlaboratory comparison.”